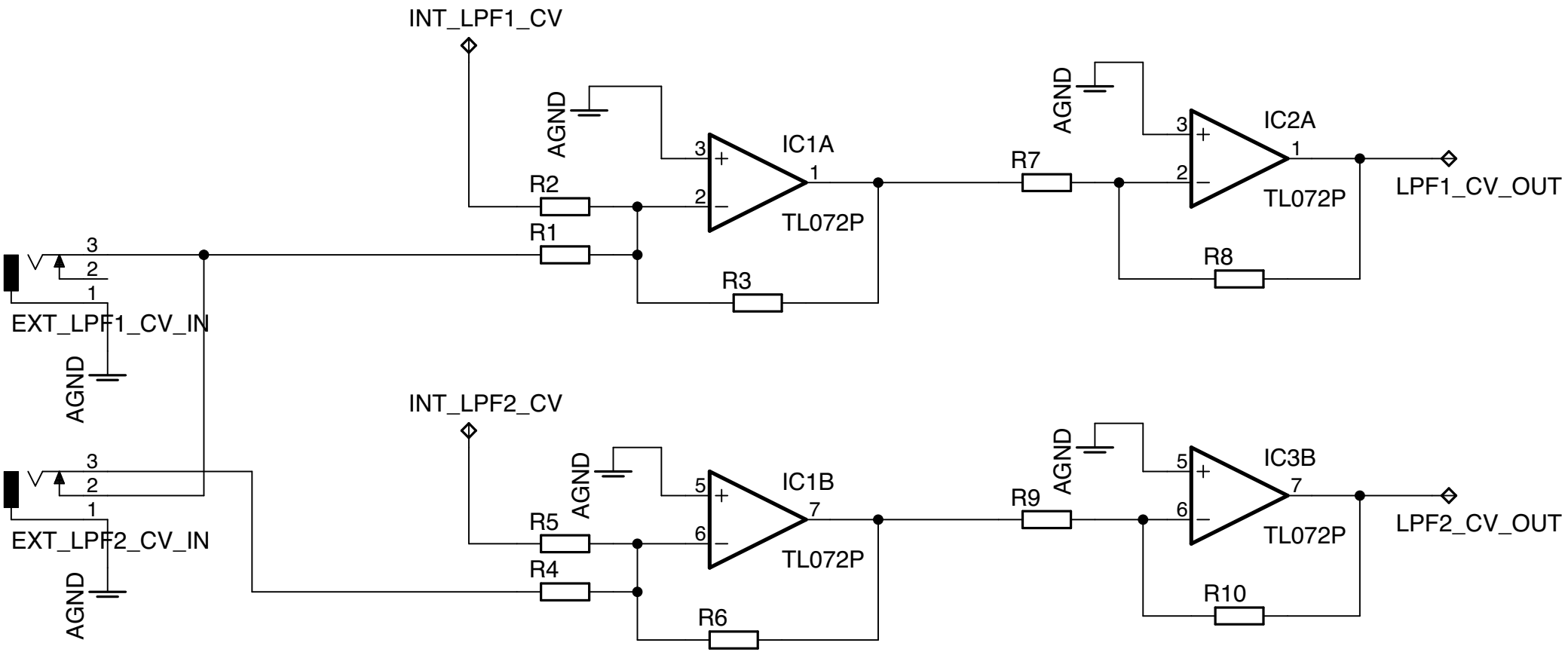
INT_LPF1_CV
AGND
IC1A
TL072P
R2
R1
R3
R7
IC2A
TL072P
R8
LPF1_CV_OUT
EXT_LPF1_CV_IN
AGND
INT_LPF2_CV
AGND
IC1B
TL072P
R5
R4
R6
R9
IC3B
TL072P
R10
LPF2_CV_OUT
EXT_LPF2_CV_IN
AGND